□□□□

18-19□□□

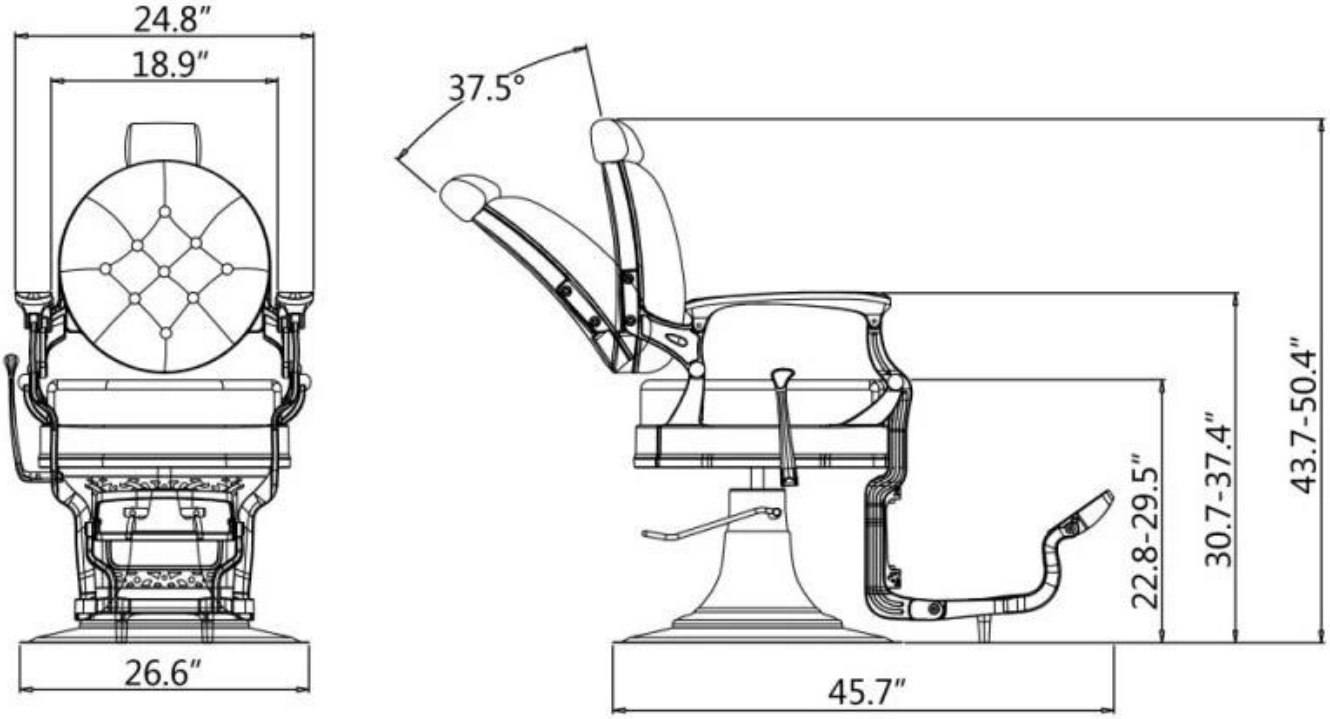
24.8″
18.9″
26.6″
37.5°
22.8-29.5″
30.7-37.4″
43.7-50.4″
45.7″

Other
Furniture

Product Prosses
1.Material
2.Material
3.Production machinery
4.The prototype
5.Assembly
6.Detection
7.Delivery
8.Packaging

PROFESSIONAL PACKAGING
STRONG PACKING, FAST TRANSPORTION

□□□□□□&□□

A.□□□□□□□QC□□□□□□□

B.□□□

□□□